Back To Article | < Previous Graphic | Next Graphic >

Logout | Help

Printer-Ready Version (Use Browser Print Button) - Click Here for Full-Size Version

Fig. 22: Exterior Lamps & Trailer connector Circuit (1 of 2)

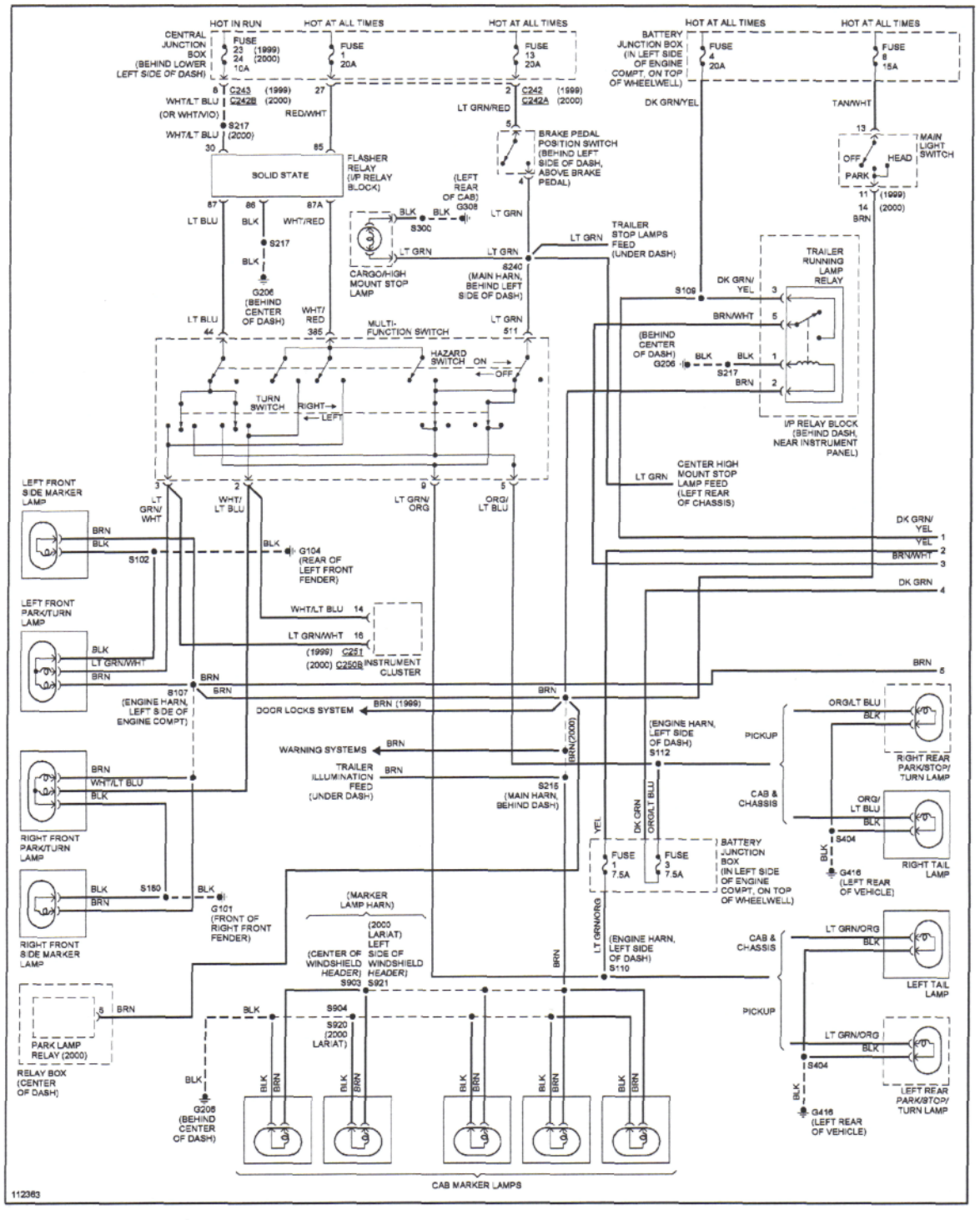

Copyright 2010 Mitchell Repair Information Company, LLC. All Rights Reserved.

Back To Article | < Previous Graphic | Next Graphic >

Illustration: VA112363